Model Number

NBB15-U1-E3

Features

- **Sensor head bidirectional and rotatable**
- **4 LEDs indicator for 360° visibility**
- **15 mm flush**

Accessories

MHW 01
Modular mounting bracket

V1-M20-80
Receptacles, M12/M20; plastic version

V1-G
Female connector, M12, 4-pin, field attachable

V1-W
Female connector, M12, 4-pin, field attachable

Technical Data

General specifications			
Switching element function		PNP	NC
Rated operating distance	s_n	15 mm	
Installation		flush	
Output polarity		DC	
Assured operating distance	s_a	0 ... 12.15 mm	
Reduction factor r_{Al}		0.33	
Reduction factor r_{Cu}		0.31	
Reduction factor r_{304}		0.74	
Reduction factor r_{Brass}		0.41	
Nominal ratings			
Operating voltage	U_B	10 ... 30 V	
Switching frequency	f	0 ... 200 Hz	
Hysteresis	H	typ. 5 %	
Reverse polarity protection		reverse polarity protected	
Short-circuit protection		pulsing	
Voltage drop	U_d	≤ 2 V	
Operating current	I_L	0 ... 200 mA	
Off-state current	I_r	0 ... 0.5 mA typ. 0.01 mA	
Off-state current T_U =40 °C, switching element off		≤ 100 µA	
No-load supply current	I_0	≤ 20 mA	
Time delay before availability	t_v	≤ 50 ms	
Operating voltage indicator		LED, green	
Switching state indicator		LED, yellow	
Functional safety related parameters			
$MTTF_d$		1500 a	
Mission Time (T_M)		20 a	
Diagnostic Coverage (DC)		0 %	
Ambient conditions			
Ambient temperature		-25 ... 85 °C (-13 ... 185 °F)	
Mechanical specifications			
Connection type		screw terminals	
Core cross-section		up to 2.5 mm^2	
Housing material		PA/metal with epoxy powder coating	
Sensing face		PA	
Housing base		plastic	
Degree of protection		IP68 / IP69K	
Mass		225 g	
Note		Tightening torque: 1.8 Nm (housing) Tightening torque: 1.0 Nm (Screw terminal)	
Compliance with standards and directives			
Standard conformity			
Standards		EN 60947-5-2:2007 IEC 60947-5-2:2007	
Approvals and certificates			
UL approval		cULus Listed, General Purpose	
CSA approval		cCSAus Listed, General Purpose	
CCC approval		CCC approval / marking not required for products rated ≤36 V	

Dimensions

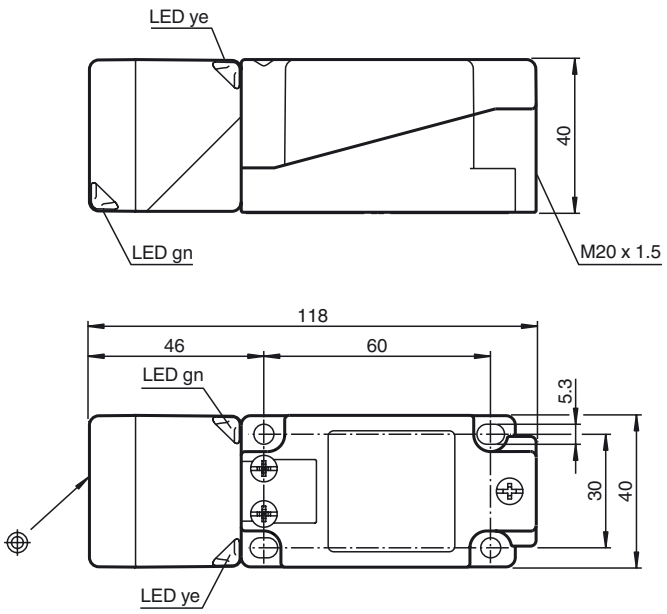

Release date: 2015-02-24 10:37 Date of issue: 2015-02-24 194768_eng.xml

Electrical Connection

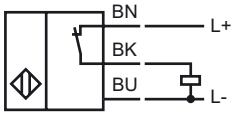

Release date: 2015-02-24 10:37 Date of issue: 2015-02-24 194768_eng.xml